TCM-325 // 2" Tri-Clamp Flanges // Field Mount Electronics

Unit Mass: 16 lbs (approx)

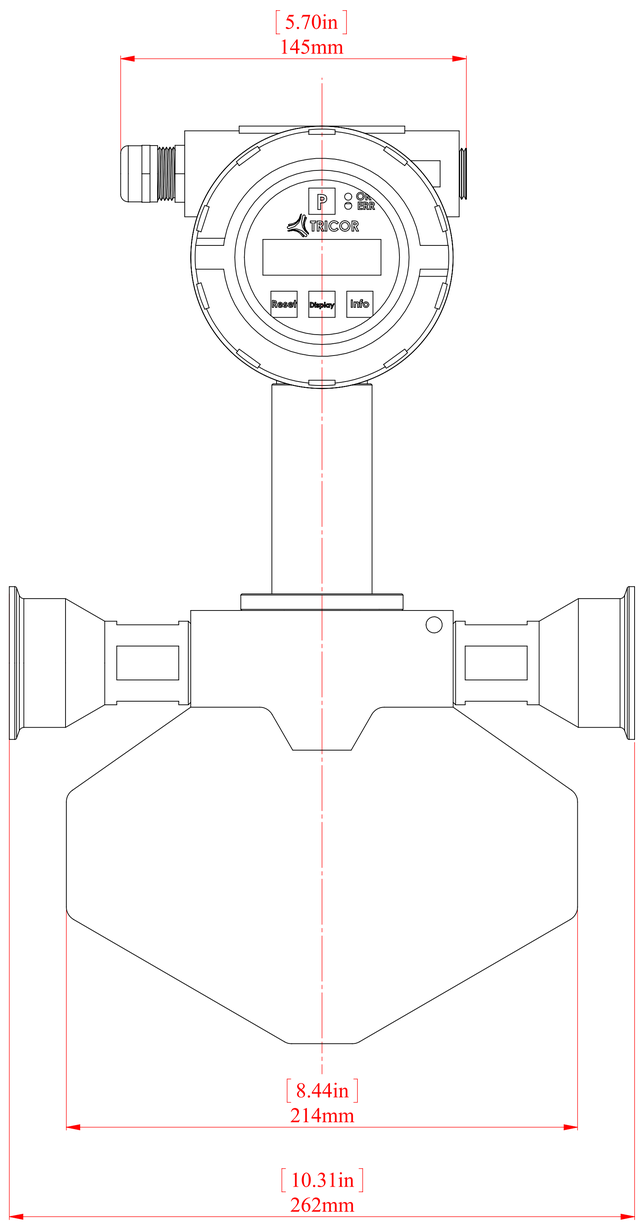

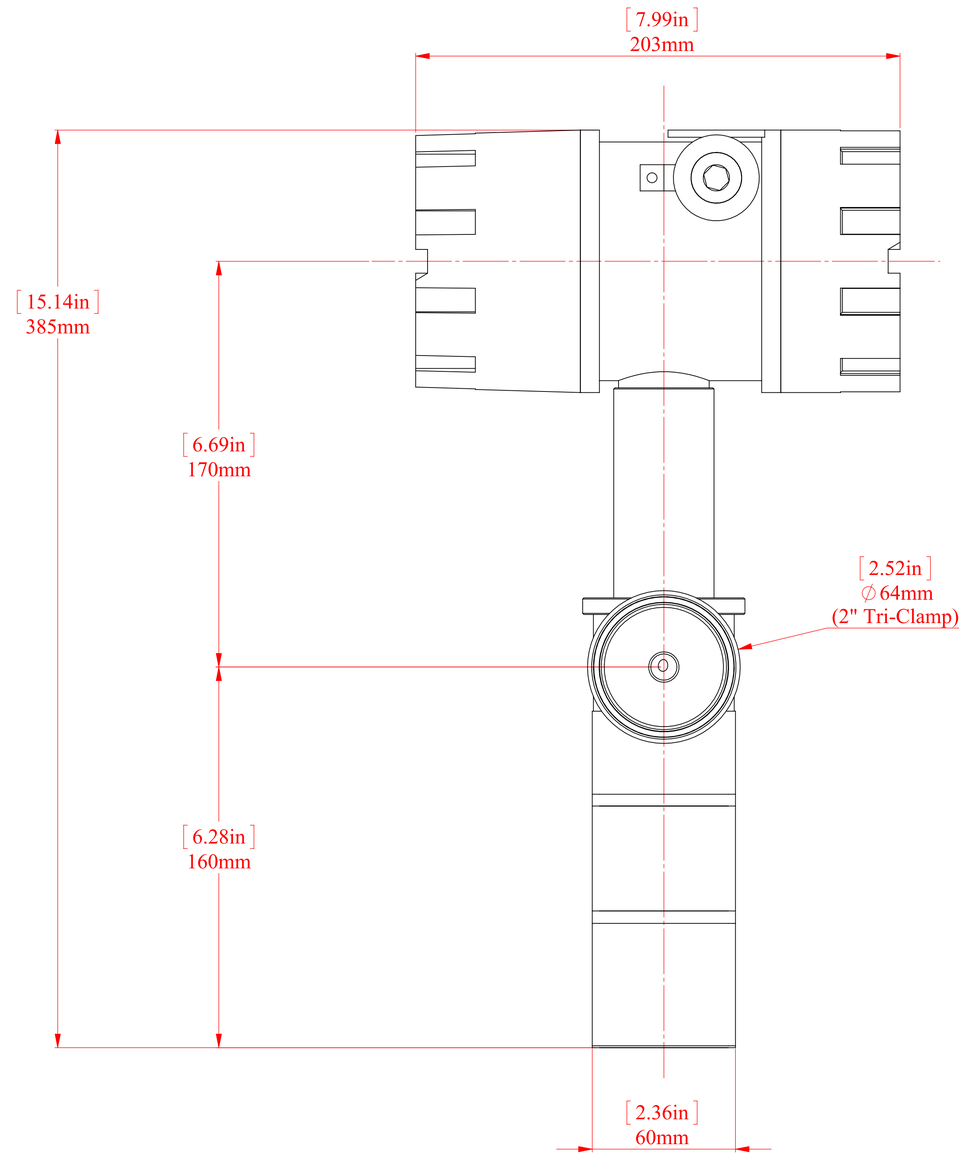

REV.	DESCRIPTION	DATE	APPROVED
A	INITIAL DRAWING RELEASE	9/26/2011	SAH

REVISIONS

AW-LAKE COMPANY USE ONLY

THIS PRINT, INCLUDING THE INFORMATION CONTAINED IN IT IS THE PROPERTY OF AW-LAKE COMPANY. IT IS CONSIDERED PROPRIETARY IN NATURE AND MAY NOT BE USED OR DISCLOSED OUTSIDE OF AW-LAKE COMPANY, EXCEPT UNDER PRIOR WRITEN AGREEMENT. ANY MODIFICATIONS MADE TO ORCOMMENTS WRITTEN ON THIS DRAWING BY UNAUTHORIZED PERSONNEL WILL VOID THIS DRAWING. ALL DIMENSIONS SHOWN ARE SUBJECT TO CHANGE WITOUT NOTICE.

THIRD ANGLE

TOLERANCES UNLESS NOTED
MERIC

. XXX +/- .013
. XX +/- .025
. X +/- .25

FRAC. +/- 1/64
ANG. +/- 0.1 DEG
SURFACE FINISH: 64 MAX

PROJECT NAME: TRICOR, TCM-325
PART DESCRIPTION: 2" TRI-CLAMP + FIELD MOUNT
MATERIAL: NA
FINISH: NA
HARDENING: NA
DRAWING NUMBER: TCM-325-T%-%%%%-C%%%
PART NUMBER: TCM-325 **REV:** A
DRAWN BY: S.HONSBERGER **DATE:** 09/26/11
PAGE: 1 OF 2 SCALE: 1:1.25

AW-LAKE COMPANY
A TASI GROUP COMPANY
8809 INDUSTRIAL DR.
FRANKSVILLE, WI
53126
TEL. # (262) 884-9800
FAX. # (262) 884-9810